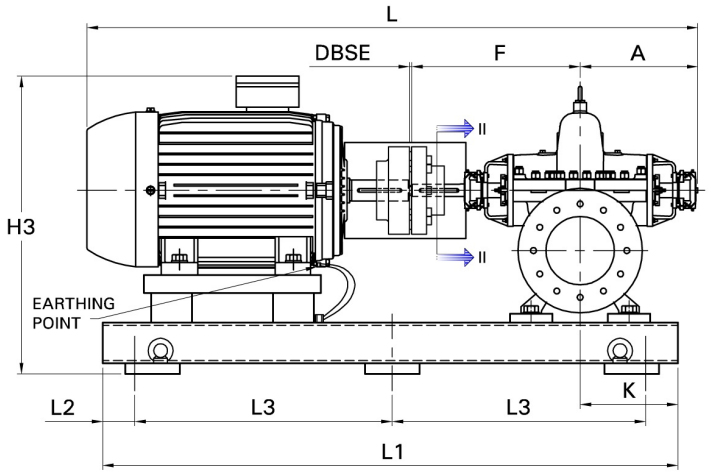

FRONT VIEW

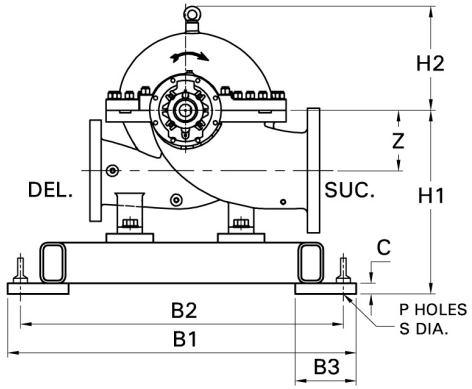

SECTION II-II

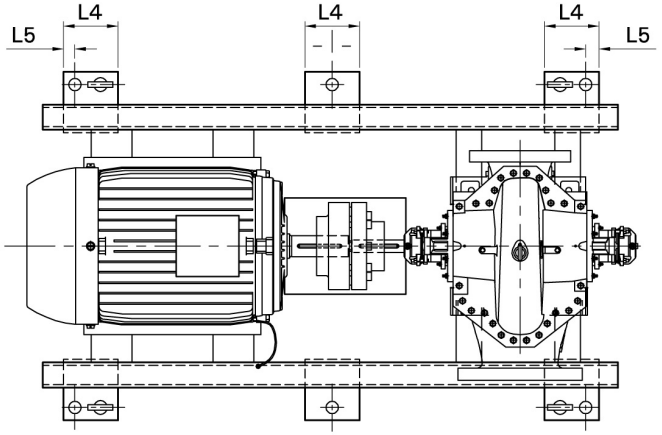

PLAN OF FOUNDATION ONLY

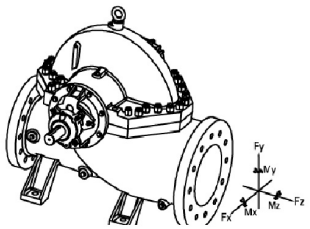

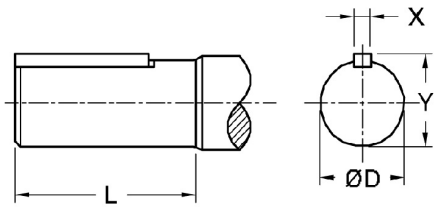

SHAFT END DETAILS

NOTES:

- ALL DIMENSIONS ARE IN mm; DIMENSIONS WITHOUT TOLERANCE FOR WELDED PARTS ARE AS PER ISO13920-D.
- REFER TO THE SPP Pumps Limited INSTALLATION GUIDE FOR ADVICE ON PUMP INSTALLATION.
- THIS DRAWING IS NOT TO BE USED FOR INSTALLATION PURPOSE UNTIL IT HAS BEEN VERIFIED BY SPP Pumps Limited.

SHAFT END DETAILS	D	X	Y	L
PUMP	**55.00**	**16.00**	**59.00**	**125**
MOTOR	**0.00**	**18.00**	**69.00**	**140**

IMPORTANT: THIS DRAWING IS THE PROPERTY OF SPP Pumps Limited AND MUST NOT BE USED OR COPIED WITHOUT THEIR AUTHORITY IN WRITING.

A	B1	B2	B3	C	DBSE	F	H1	H2	H3	K	L	L1	L2	L3	L4	L5	P	S	-	-
460	1,130	1,080	145	40.00	4.00	585	675	545	1,265	265	2,293	1,800	100	800	110	30.00	6.00	24.00	-	-

Z	-	-	-	-	-	-	-	-	-	-	-	-	-	-	-	-	-	-	-	-
285	0	0	0	0	0	0	0	0	0	0	0	0	0	0	0	-	-	-	-	-

PUMP DUTIES			
CAPACITY	8,400.0 l/min	EFFICIENCY	74.58 %
TOTAL HEAD	7.00 bar	PUMP INPUT	131 kW
DENSITY	0.998 SG	NPSHR	3.95 m

FLANGE DRILLING STANDARD AND DETAILS					
STD (SUC)	BS EN1092 PN16 (FF)		**STD (DEL)**	BS EN1092 PN16 (FF)	
	NOM. SIZE	**R.F.DIA**	**P.C.D.**	**NO OF HOLES**	**HOLE SIZE**
SUCTION	250 mm	N/A	355	12	26
DELIVERY	200 mm	N/A	295	12	22

ALLOWABLE NOZZLE LOADING						
	FORCES			MOMENTS		
	Fx	Fy	Fz	Mx	My	Mz
SUCTION	210.0 kgf	524.9 kgf	420.0 kgf	3,138 N.m	1,569 N.m	1,569 N.m
DELIVERY	178.0 kgf	445.0 kgf	356.0 kgf	2,667 N.m	1,334 N.m	1,334 N.m

TAPPING DETAILS			
DESCRIPTION	SIZE / TYPE	DESCRIPTION	SIZE / TYPE
Suction Gauge	1/4"BSP	Brg. cooling in	-
Delivery Gauge	1/4"BSP	Brg. cooling out	-
Casing Drain	1/2"BSP	Pad cooling in	-
Casing Vent	1/4"BSP	Pad cooling out	-
Sealing / flush in	-	Priming In	1/2"BSP
Sealing / flush out	-	Steam In	-
St. box cooling in/out	-	Steam out	-
Base Drain	-	RTD Tapping	-

EXTERNAL LIQUID / WATER REQUIREMENT		
	SEALING LIQUID	COOLING WATER
FLOW	-	-
PRESSURE	-	-

ADDITIONAL DATA			
STATIC LOAD	727.0 kg	DYNAMIC LOAD	908.8 kg
GD^2 OF PUMP	1.13 kg.m2		
BASE TYPE	STANDARD	BASE MATERIAL	MS
COUPLING TYPE	Claw type	GUARD MATERIAL	Safe area
COUPLING SIZE	0.0	F BOLT MATERIAL	MS

DIRECTION OF ROTATION FROM DE	Clockwise

PUMP	**TD20E**	PUMP WT.	470.0 kg
DRIVER MAKE	WEG	DRIVER WT.	0.00 kg
DRIVER RATING	160kW	BASE WT.	245.0 kg
DRIVER SIZE	315S/M	COUPLING WT.	12.00 kg
RATED SPEED	2950RPM	PUMPSET WT.	727.0 kg
ENQ. NO./DATE	Sólvellir 2 Grundarfirði /	QUANTITY	1
PO. NO./DATE	-	TAG NO.	001
QUOTATION NO.	294945	DATE	-
O/A NO.	-	MISI	001
CUSTOMER	Vatn & Veitur ehf		
END USER	-		
PROJECT			
CONSULTANT	-		
SERVICE	-		

SPP Pumps Limited
Coleford, England GL16 8PS

GENERAL ARRANGEMENT DRAWING

DRAWING NO.	TF73980019-0