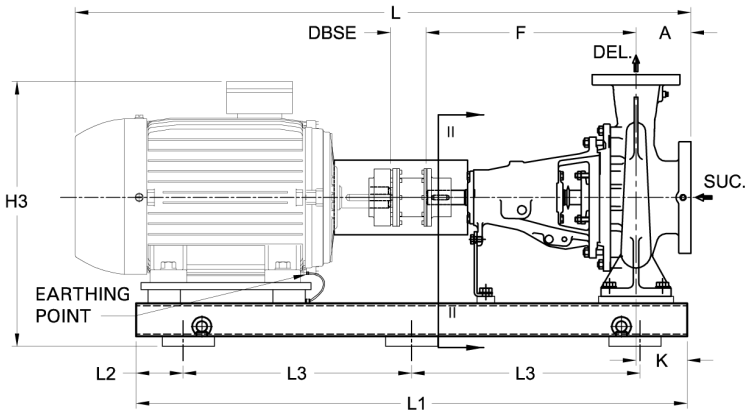

FRONT VIEW

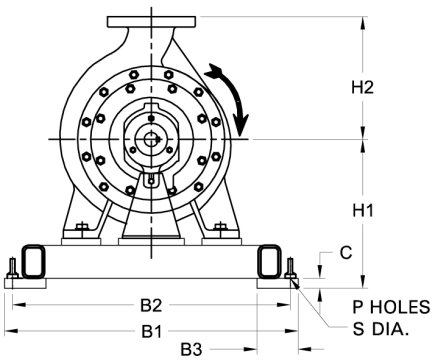

SECTION II - II

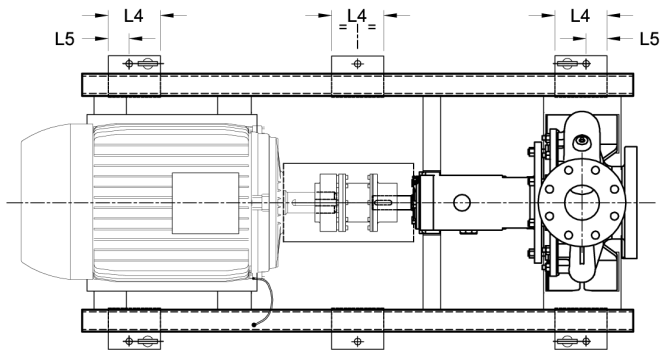

PLAN

NOTES:

- ALL DIMENSIONS ARE IN mm; DIMENSIONS WITHOUT TOLERANCE FOR WELDED PARTS ARE AS PER ISO13920-D.
- REFER TO THE SPP Pumps Limited INSTALLATION GUIDE FOR ADVICE ON PUMP INSTALLATION.
- THIS DRAWING IS NOT TO BE USED FOR INSTALLATION PURPOSE UNTIL IT HAS BEEN VERIFIED BY SPP Pumps Limited.

SHAFT END DETAILS				
	D	X	Y	L
PUMP	42.00	0.00	0.00	0.00
MOTOR	65.00	18.00	69.00	140

IMPORTANT: THIS DRAWING IS THE PROPERTY OF SPP Pumps Limited AND MUST NOT BE USED OR COPIED WITHOUT THEIR AUTHORITY IN WRITING.

A	F	DBSE	H1	H2	C	K	P	S	B1	B2	B3	L	L1	L2	L3	L4	L5	H3	-	-
160	530	-1.00	-1.00	400	-1	-1.00	-1.00	-1.00	-1.00	-1.00	-1.00	1,901	-1.00	-1.00	-1.00	-1.00	-1.00	-1.00	0.00	0.00

-	-	-	-	-	-	-	-	-	-	-	-	-	-	-	-	-	-	-	-	-
-	-	-	-	-	-	-	-	-	-	-	-	-	-	-	-	-	0.00	0.00	0.00	0.00

PUMP DUTIES			
CAPACITY	5,500.0 l/min	EFFICIENCY	76.62 %
TOTAL HEAD	6.50 bar	PUMP INPUT	77.77 kW
DENSITY	0.998 SG	NPSHR	0.00 m

FLANGE DRILLING STANDARD AND DETAILS					
SUCTION	BS EN1092 PN16 FF		**DELIVERY**	BS EN1092 PN16 FF	
	NOM. SIZE	**RF DIA.**	**P.C.D.**	**NO OF HOLES**	**HOLE SIZE**
SUCTION	200 mm	N.A.	295 mm	12	22.00 mm
DELIVERY	150 mm	N.A.	240 mm	8	22.00 mm

ALLOWABLE NOZZLE LOADING						
	FORCES			MOMENTS		
	Fx	Fy	Fz	Mx	My	Mz
SUCTION	182.0 kgf	454.0 kgf	364.0 kgf	1,726 N.m	1,353 N.m	1,353 N.m
DELIVERY	136.0 kgf	340.0 kgf	272.0 kgf	2,040 N.m	1,020 N.m	1,020 N.m

TAPPING DETAILS			
DESCRIPTION	SIZE / TYPE	DESCRIPTION	SIZE / TYPE
Suction Gauge	1/2"BSP	Brg. cooling in	NOT APPLICABLE
Delivery Gauge	1/2"BSP	Brg. cooling out	NOT APPLICABLE
Casing Drain	3/8"BSP	Pad cooling in	NOT APPLICABLE
Casing Vent	NOT REQUIRED	Pad cooling out	NOT APPLICABLE
Sealing / flush in	NOT APPLICABLE	Priming In	NOT APPLICABLE
Sealing / flush out	NOT APPLICABLE	Steam In	NOT APPLICABLE
St. box cooling in/out	NOT APPLICABLE	Steam out	NOT APPLICABLE
Base Drain	NOT APPLICABLE	RTD Tapping	NOT APPLICABLE

EXTERNAL LIQUID / WATER REQUIREMENT		
	SEALING LIQUID	COOLING WATER
FLOW	0.00 l/min	0.00 l/min
PRESSURE	0.00 bar.g	0.00 bar.g

ADDITIONAL DATA			
STATIC LOAD	1,086.7 kg	DYNAMIC LOAD	1,358.4 kg
GD^2 OF PUMP	0.18 kg.m2		
BASE TYPE	Standard	BASE MATERIAL	MS
COUPLING TYPE	Claw type	GUARD MATERIAL	Safe area
COUPLING SIZE	160	F BOLT MATERIAL	---

DIRECTION OF ROTATION FROM DE	CLOCKWISE

PUMP	**KP15Y**	PUMP WT.	170.0 kg
DRIVER MAKE	WEG	DRIVER WT.	653.0 kg
DRIVER RATING	90KW	BASE WT.	250.0 kg
DRIVER SIZE	280S/M	COUPLING WT.	13.70 kg
RATED SPEED	2950RPM	PUMPSET WT.	1,086.7 kg
ENQ. NO./DATE	JS-200291 / 27 Mar 2020	QUANTITY	1
PO. NO./DATE	-	TAG NO.	KP15Y EN electric pump
QUOTATION NO.	362973	DATE	-
O/A NO.	-	MISI	-
CUSTOMER	Vatn & Veitur ehf		
END USER	Vatn & Veitur ehf		
PROJECT	Miðhraun 15		
CONSULTANT	-		
SERVICE	-		

SPP Pumps Limited
Coleford, England GL16 8PS

TENTATIVE GENERAL ARRANGEMENT DRAWING

DRAWING NO. TF021176687-0